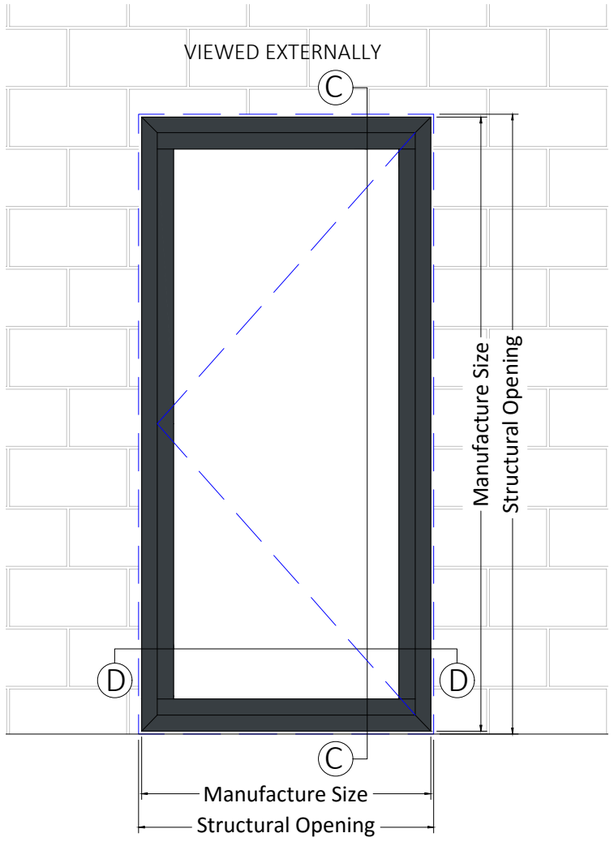

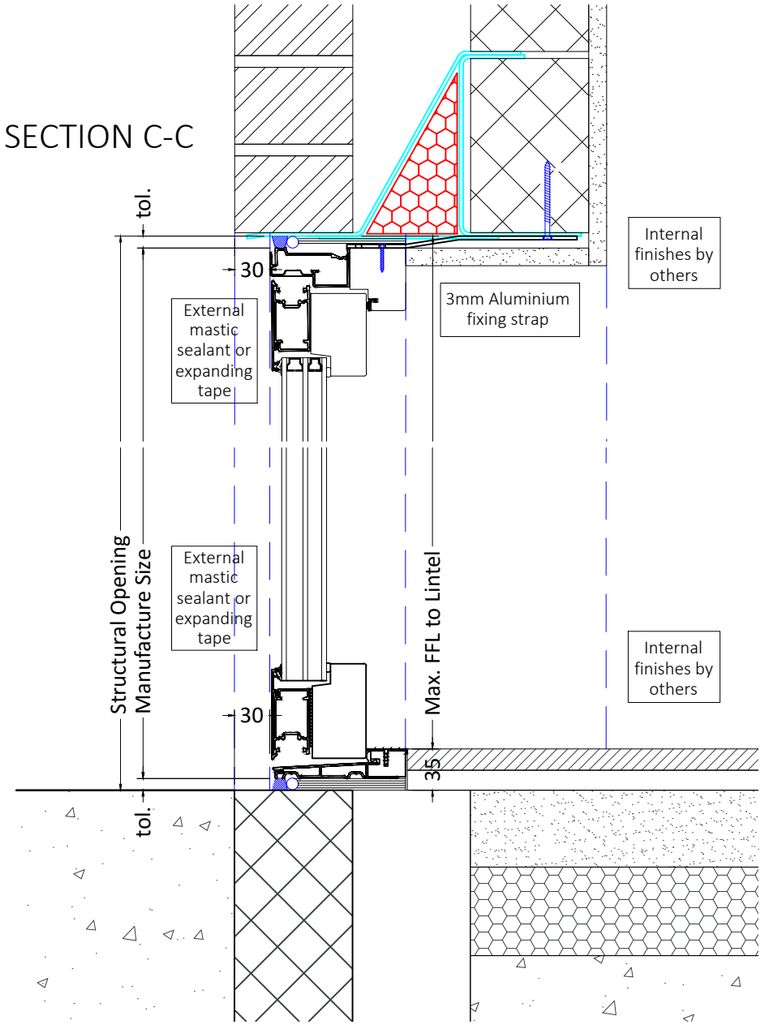

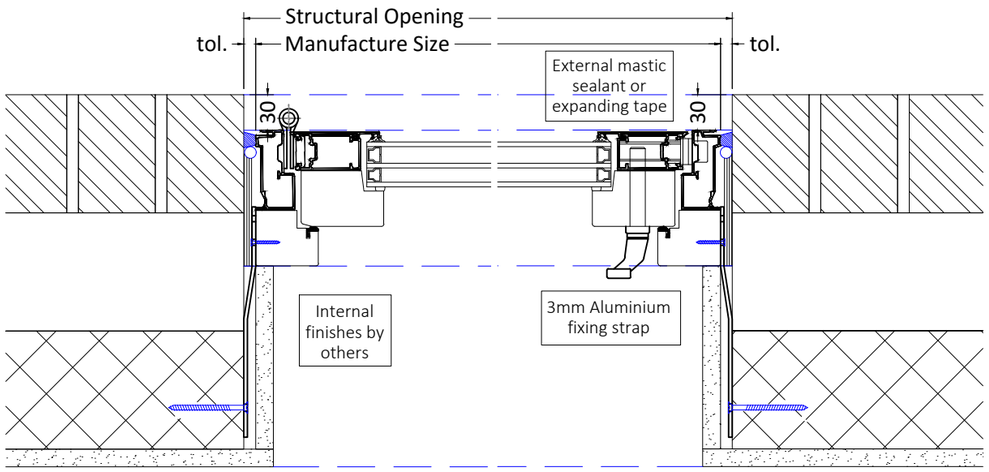

SECTION D-D

red

DETAILS ON THIS DRAWING ARE THE COPYRIGHT OF RED INSTALLATIONS AND MUST NOT BE REPRODUCED IN WHOLE OR PART WITHOUT PERMISSION

DO NOT SCALE !!

SEE SPECIFICATION DRAWING FOR SPEC.

IMPORTANT NOTES (THE RECIPIENT WILL BE DEEMED TO HAVE COGNISANCE AND ACCEPTANCE OF ALL THESE NOTES)
THIS DRAWING MUST BE CHECKED BY THE CLIENT, HIS AGENT OR THE MAIN CONTRACTOR AND APPROVED IN WRITING. ANY SUBSEQUENT WRITTEN INSTRUCTION TO MANUFACTURE (INCLUDING 'NO COMMENT') SHALL CONSTITUTE APPROVAL. MANUFACTURE CANNOT COMMENCE UNTIL APPROVED. THEREAFTER THE CLIENT OR THE MAIN CONTRACTOR WILL BE LIABLE FOR ANY ADDITIONAL EXPENSES INCURRED BY THE MANUFACTURER AND THEIR AGENTS FOR ANY ALTERATION TO THE DESIGN DETAIL OR LAYOUT REQUESTED BY THEM.

CDM REGULATIONS
DESIGN RISK ASSESSMENT

THE SIZE AND SHAPE OF INDIVIDUAL UNITS FOR THIS PROJECT HAVE BEEN DESIGNED TO SATISFY THE OVERALL DESIGN REQUIREMENTS FOR THE BUILDING.
ALL PERSONS HANDLING AND INSTALLING SUCH UNITS SHOULD BE AWARE THAT THERE ARE RISKS ASSOCIATED WITH THIS TYPE OF WORK THAT CANNOT BE DESIGNED OUT.

RISK REDUCTION:
FIXERS MUST BE SUITABLY EXPERIENCED IN THE HANDLING OF WINDOWS AND DOORS AND EMPLOY LIFTING METHODS APPROPRIATE TO THE SIZE AND SHAPE OF THE UNITS.
ACCESS AND WORKING PLATFORMS MUST BE TO THE STANDARD REQUIRED BY CURRENT LEGISLATION.
REFERENCE MUST ALWAYS BE MADE TO COSSH INFORMATION FOR THE MATERIALS BEING USED.

FIXING POSITIONS:

FIXING POSITIONS NOTED THUS:

STANDARD RECOMMENDED LOCATIONS ARE 150MM FROM EACH END AND EACH MULLION, THEN @ 450-600MM CENTRES.

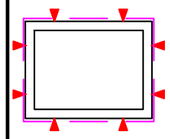

REV	DESCRIPTION	DATE

DATE: .....

SIGNED: .....

PROJECT: -

TITLE: TYPICAL SECTION DETAILS LOW-PROFILE THRESHOLD

DRAWN BY: JNB		DATE: NOV '16	
SCALE: 1:5/20 @ A4		CHECKED:	
CONTRACT: -		DRAWING: 007	REV: 0

CONSTRUCTION ISSUE